Measurement and control

m.2

Digital instruments and measuring transducers

M.2

Digital instruments and measuring transducers

M.2 - Digital instruments and measuring transducers

Introduction M2-3

Product selection table M2-5

DC Series
Digital indicator for panel mounting M2-6

DH series
Digital instruments for panel mounting M2-9

Royal series
Digital indicator of various parameters for panel or DIN rail mounting M2-17

DM45 Series
Digital instruments M2-20

CMM 96
Digital three-phase measurement station for panel mounting. M2-21

Transducers
Narrow profile. M2-23
High-precision M2-25

Accessory M2-34

Digital instruments and measuring transducers

CIRCUTOR offers a wide range of fully programmable digital indicators and instruments that can be used to display electrical parameters or define an alarm system associated to an electrical parameter.

M.2

Definition

In digital instruments, the measurement process provides discontinuous information, expressed in a number with various digits. This is the numerical value of the parameter measured; the numerical indication is presented throughout the time scale with a predetermined frequency.

In general, digital instruments have advanced input features when compared to analogue instruments, for example, a higher input impedance in voltage circuits (greater than 2 MW), with a lower consumption of energy and higher accuracy, offering an automatic scale selection and indication of the polarity, which is stored in the instrument and this improves the reliability of the measurement process.**CIRCUTOR** offers three ranges of digital programmable instruments: **DC-B, DH-96** and **ROYAL**.

Its general features are as follows:

- Different sizes 48 x 48, 72 x 72, 96 x 96, 96 x 48 mm
- Multi-scale programmable digital instruments.
- Measurement in true root mean square (TRMS)Measurement of voltage and current with the same unit.Voltmeter, ammeter, wattmeter, varmeter, voltammeter, cosφ indicator, THD indicator, process indicators, process control, etc.
- Top performance features in the measurement circuit:
  - Accuracy (class 0.1; class 0.2; class 0.5), depending on the type.
  - Resolution up to 16 bits.
  - Visualization capacity (3, 4, 5 digits)
- Wide range of programmable and multi-scale digital instruments to measure AC and DC.
- Module connection options (**DH-96** family):
  - Relays
  - Analogue outputs (0…10 V, 4..20 mA, etc.)
  - Communications with the PC (RS-232, RS-485, with protocolos MODBUS RTU, ETHERNET).
- Auxiliary AC and DC power supply
- **PowerStudio** and **PowerStudio SCADA** Software to centralise and record the values measured by the computer (equipment with communications)
- Network connection with other RS-485 instruments (**CVM** power analyzers, etc.)
- Specific instruments for the control of processes (galvanic dips, capacitor bank load analyzers, solar energy, etc.)
- Development in compliance with the current regulations.
- High protection degree (up to IP 65, with accessory)

Applications

1.- Display on the screen of the numerical value of one or more electrical parameters of a sub-panel, control process or determined unit.

2.- Alarm system: acting on meters, sound and/or light devices, to carry out the protection or notification operations with a relay output .

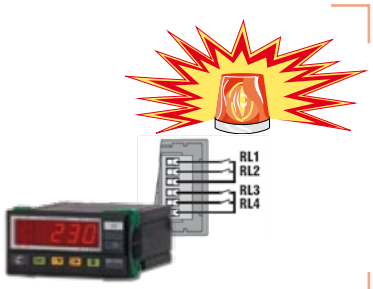

3.- Control system via software:

- Voltage control
- Current control
- Frequency control
- Temperature control
- Control of any process signal
- Control of harmonics
- Time control

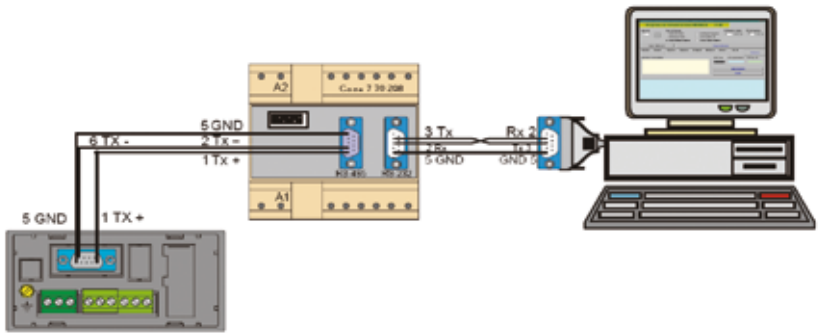

Product selection table

		Measurement	Page
DC-B		Single-phase A.C. or D.C.	6
DH96		Single-phase A.C. or D.C.	9
Royal		Single-phase A.C.	17
DM45		Single-phase A.C.	19
CMM 96		Three-phase A.C.	21
Narrow profile transducers		Single-phase or three-phase according to type	23
High-precision tranducers		Three-phase A.C.	25

Digital instruments

DC Series

Digital indicator for panel mounting

Description

- Fully programmable: scale, transformer ratio, etc.
- Measurement of V, A, Hz or ºC.
- Measurement in true root mean square (TRMS), ac types.Excellent quality / price ratio
- Measurement of maximum and minimum values
- Optional relay output, depending on the type

Application

- The high luminosity 4-digit digital display indicates the voltage, current, frequency or instantaneous temperature, with the maximum and minimum values of medium and low voltage lines.

Features

Power supply circuit		115 / 230 Vac (±10%)
Frequency		40...70 Hz
Consumption		4 V·A
Measurement circuit		
Resolution		10 bits
Display refresh rate		1s
Accuracy		± 0.5 FE (± 1 digit)
No. of samples per cycle (AC)		32 / cycle
No. of samples per reading (DC)		64 / reading
Display		
Digits		4
Decimal place		Programmable
Range		0...9999 (ac) / -1999...9999 (dc)
Scale excess indicator		"- - - -"
Insulation between the input and measurement		
Test voltage		3 kV, 50 Hz, 1 min
Impulse test		4 kV (1.2 / 50 µs)
Ambient conditions		
Storage temperature		- 40 ... +70 ºC
Operating temperature		-10 ... +65 ºC
Altitude		2000 m
Build features		
Box material		ABS V0, grey anthracite
Degree of protection	Fitted unit (front panel)	IP 54 (IP 65 with front panel protection)
	Box and terminals	IP 20
Weight		250 g
Standards		
IEC 1010, IEC 348, IEC 664, EN 50081-1, EN 50082-1		

Digital instruments

DC series

Digital indicator for panel mounting

References

DC. Voltmeter

Measurement	Scale	Input	Size	Type	Code
AC	150, 300, 600 V ac	Direct: 600 V Transformer: Programmable	48 x 48	DC 48 B V ac	M20210
			72 x 72	DC 72 B V ac	M20220
DC	10, 50, 200 V dc	Direct: -200 / +200V Process: 0...10 V	48 x 48	DC 48 B V dc	M20213
			72 x 72	DC 72 B V dc	M20223
DC	600 V dc	-600 / 600 V	48 x 48	DC 48 B V dc	M20214
			72 x 72	DC 72 B V dc	M20224
DC	60, 150, 200 mV dc	Direct: -200 mV / +200 mV Shunt: .../60 mV, .../150 mV	48 x 48	DC 48 B mV dc	M20217
			72 x 72	DC 72 B mV dc	M20227

DC. Ammeter

Measurement	Scale	Input	Size	Type	Code
AC	... / 5 A	Direct: 5 A Transformer: .../5 A	48 x 48	DC 48 B A ac	M20211
			72 x 72	DC 72 B A ac	M20221
AC	... / 5 A	Direct: 5 A Transformer: .../5 A	72 x 72	DC 72 MD A ac (*)	M2022A
AC	10 A	Direct: 10 A	48 x 48	DC 48 B A ac	M20212
			72 x 72	DC 72 B A ac	M20222
DC	5, 20,200 mA	Direct: -200 mV / +200 mV Process: 0 or 4...20 mV	48 x 48	DC 48 B A dc	M20215
			72 x 72	DC 72 B A dc	M20225
DC	10 A	Direct: 10 A	48 x 48	DC 48 B A dc	M20216
			72 x 72	DC 72 B A dc	M20226

(*) Output relay available

DC. Frequency meter

Measurement	Scale	Input	Size	Type	Code
AC	Hz < 100, 2 dec. Hz > 100, 1 dec.	40...600 V	48 x 48	DC 48 B Hz ac	M20218
			72 x 72	DC 72 B Hz ac	M20228

Digital instruments

DC series

Digital indicator for panel mounting

References

DC. Temperature

Measurement	Relays	Input	Size	Type	Code
°C	-	-200 ... +200 °C	72 x 72	**DC 72 TMP22**	**M20621**
	1	-200 ... +200 °C	72 x 72	**DC 72 TMP22 - 1R**	**M20623**
	-	-200 ... +800 °C	72 x 72	**DC 72 TMP28**	**M20622**
	1	-200 ... +800 °C	72 x 72	**DC 72 TMP28 - 1R**	**M20624**

Coding table

M	2	X	X	X	X	0	0	X	X

Code		Internal Code	
Auxiliary power supply	Standard (230 V)	0	
	100 ... 120 V ac	1	
	480 ... 500 V ac	4	
	18 ... 36 V dc	7	
Current input	Standard (.../ 5 A)		0
	... / 1 A		1

Dimensions

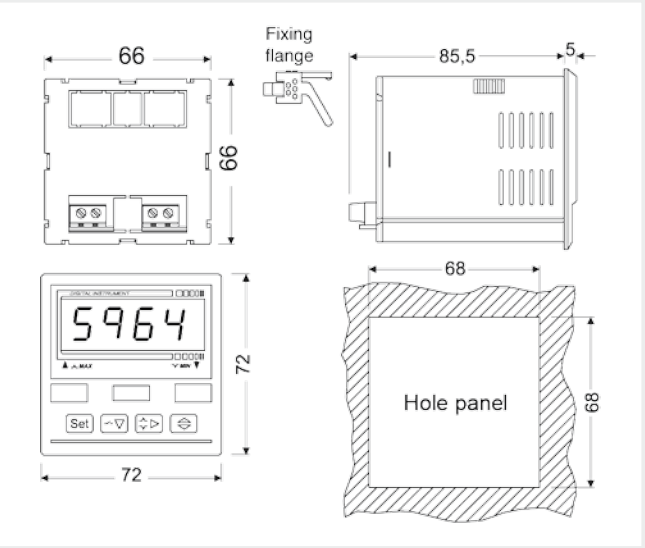

Connections

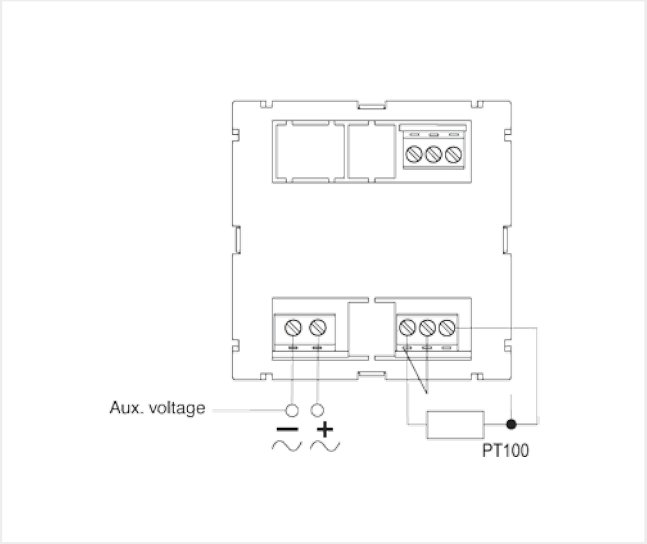

Digital instruments

DH series

Digital instruments for panel mounting

Description

- Digital unit designed to show the programmed value of an electrical variable or process signal on a display, depending on type. Also useful for regulation if used with relay output cards (alarms)
- Fully programmable: scale, transformation ratio, alarm relays, communications, etc.
- Measurement of V, A, Hz and process signal (impulses, weight, temperature, pressure, etc).
- Measurement in true root mean square (TRMS), types in AC.
- Multitude of options with expansion modules
- 4 high luminosity digits
- High accuracy
- Installation in 96 x 48 mm panel
- 4 digit, high luminosity

Application

- The high luminosity 4-digit digital display indicates the voltage, current, frequency, etc. and it can be used to define the alarms of the different electrical parameters measured.
- Transducer display of measured parameters to analogue signal for PLCs
- Display and communication of measured data via RS-485 / RS-232 bus for integration into software or PLC.

Features

Power supply circuit	230 Vac (-15 ... +20%)
Frequency	4 V·A (without card), 7 V·A (with card)
Consumption	45...65 Hz
Measurement circuit	
Overvoltage (permanent / during 10 s)	1.2 U_n / 2 U_n
Overload (permanent / during 10 s)	1.2 I_n / 5 I_n
Measurement margin	2 .. 120 %
No. of conversions per cycle	32
Display	Seven 14 mm segments, red
Decimal place	Programmable
Scale excess indicator	"- - - -"
Insulation	
Test voltage	3 kV, 50 Hz, 1 min
Impulse test	4 kV (1.2 / 50 s)
Ambient conditions	
Storage temperature	-40 ... +70 ºC
Operating temperature	-10 ... +65 ºC
Altitude	2000 m
Build features	
Box material	ABS V0, grey anthracite
Degree of protection	Box and terminals: IP 20 / Front panel: IP 54
Weight	550 g
Standards	
In A, C, P types: IEC 1010, IEC 348, IEC 664, VDE 0110, VDE 0435	
In other types: IEC 1010, IEC 348, IEC 664, EN 50081-1, EN 50082-1	

References

DH96. Ammeter or Voltmeter

Measurement	Parameters	Range	Scale	Accuracy	Display	Type	Code
DC	A or V	200 V dc or 200 mA	200 mA or 50,100, 200 V	0.2 % (± 1 dig)	4 digits	**DH 96 C**	**M20411**
AC	A or V	600 V ac or ... / 5 A	... / 5 A or 150, 300, 600 V	0.5 % (± 1 dig)	4 digits	**DH 96 A**	**M20412**

Digital instruments

DH series

Digital instruments for panel mounting

References

DH96. Ammeter

Measurement	Parameters	Range / Scale	Accuracy	Display	Type	Code
AC	A	…10 A	0.5 % (± 1 dig)	4 digits	**DH 96 A (10 A)**	**M20413**

DH96. Ammeter and voltmeter (with shunt .../60 mV)

Measurement	Parameters	Range / Scale	Accuracy	Display	Type	Code
DC	A and V	Programmable: V and A Range of V: 1 to 100 V Range of A: With shunt .../60 mV	0.2 % (± 1 dig)	4 digits	**DH 96 A V**	**M2041C ***

*** Expansion cards are not used**

DH96. Measurement station

Measurement	Parameters	Range	Scale	Accuracy	Display	Type	Code
DC	V, A, kW, kW·h	Range of V: up to 800 V Vdc Range of A: .../60 mV	Programmable: Selec. V: 100 / 300 / 800 Vdc	0,2 % (± 1 dig.)	4 digits	**DH 96 CPM**	**M20419**

DH96. Universal process indicator

Measurement	Parameters	Range Scale	Accuracy	Display	Type	Code
DC	-	± 20 mA, ± 1 mA, ± 120 mV, ± 500 mV, ± 10 V	0,2 % (± 1 dig.)	4 digits	**DH 96 P**	**M20415**

DH96. Frequency meter and tachometer

Measurement	Parameters	Range / Scale	Accuracy	Display	Type	Code
-	Hz, r / min	0.1 ... 20000 Hz	-	5 digits	**DH 96 FT**	**M20417**

DH96. Chonometer and impulse meter

Measurement	Parameters	Range / Scale	Accuracy	Display	Type	Code
-	S, min, h, No. impulses	Programmable to measure time and impulses	-	5 digits	**DH 96 CT**	**M20418**

DH96. Temperature

Measurement	Parameters	Range / Scale	Accuracy	Display	Type	Code
-	ºC	RTD sensor and thermocouple	0.2 % (±1 dig)	5 digits	**DH 96 TMP**	**M2041E**

Digital instruments

DH series

Digital instruments for panel mounting

Dimensions

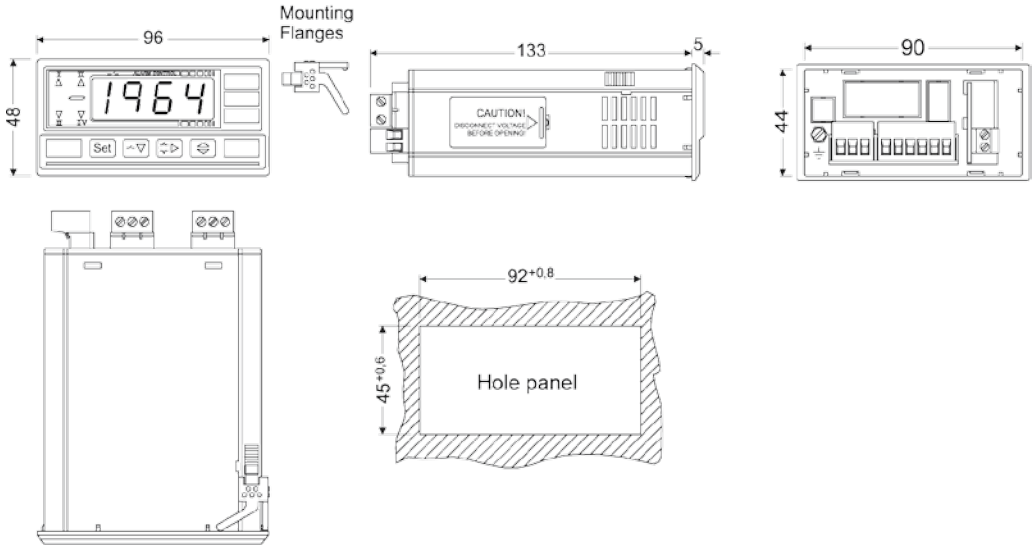

Connections

DH96 - A / C / P

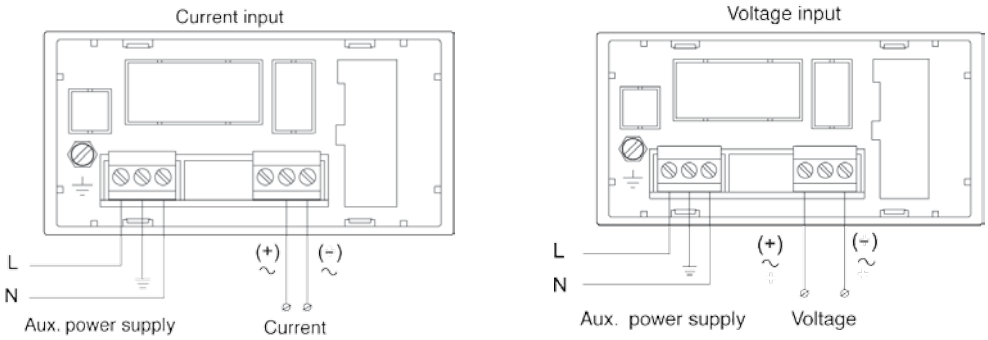

DH96 - AV / CPM

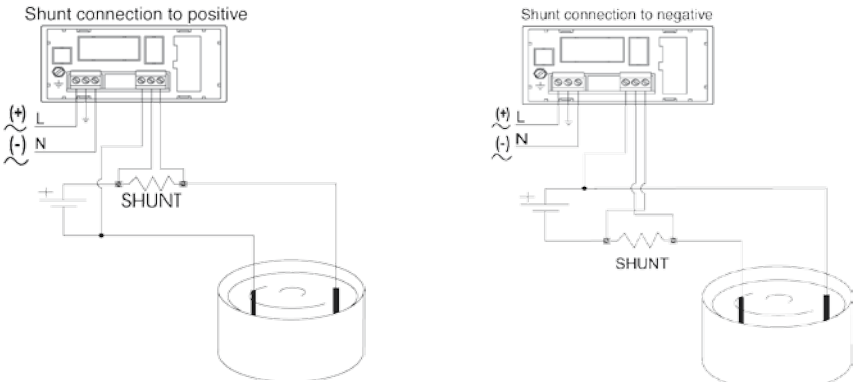

Digital instruments

DH series

Digital instruments for panel mounting

Connections

DH96 - FT

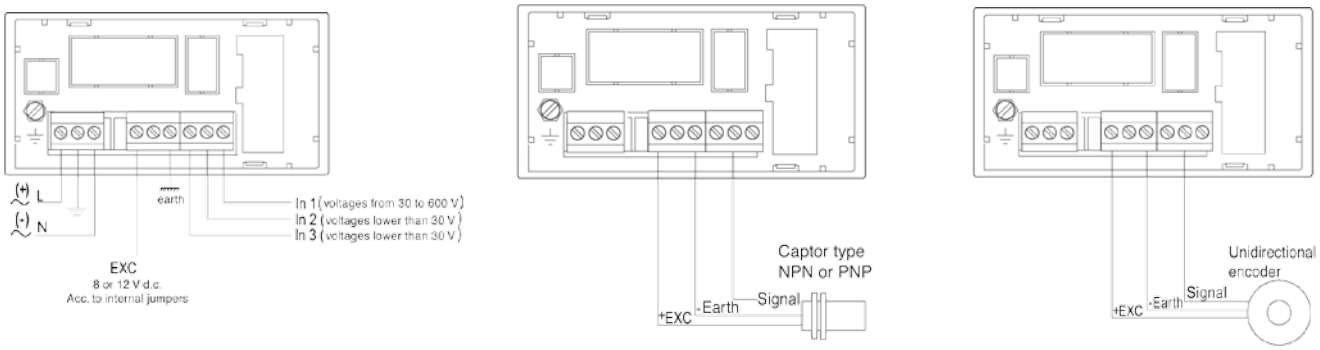

DH96 - CT

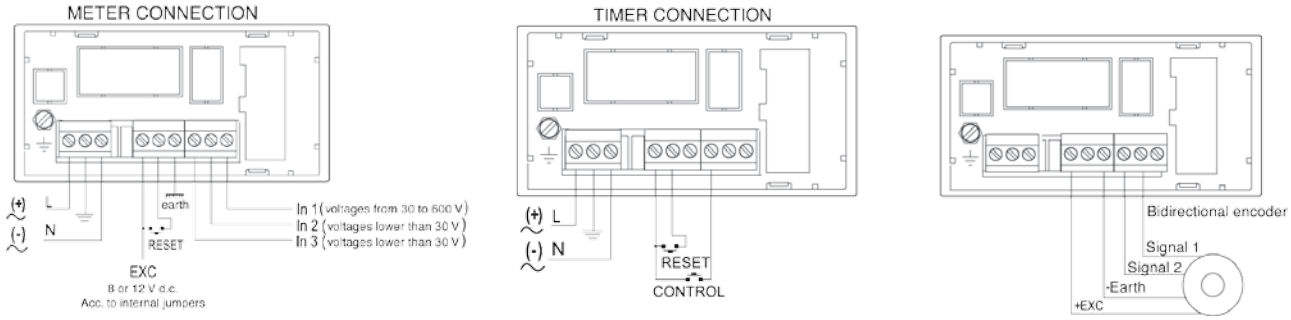

DH96 - TMP

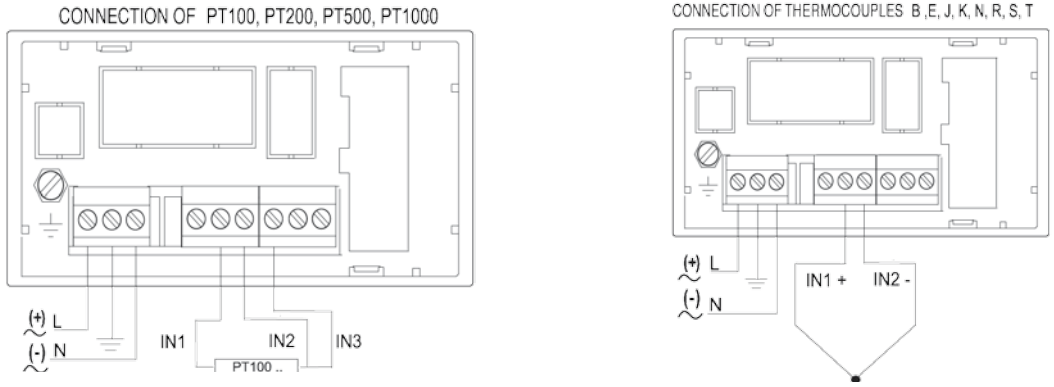

DIN

DH series

Digital instruments for panel mounting

Types	COMPATIBILITY WITH DH 96 MODULES									Code
	C	A	AV	WG	CPM	P	FT	CT	TPM	
2 relays	•	•	-	•	•	•	•	•	•	M20421
4 relays	•	•	-	•	•	•	•	•	•	M20422
2 relays + RS-485 or RS-232 (Modbus/RTU)	•	•	-	•	•	•	•	•	•	M20423
Analogue output 0 / 4...20 mA	•	•	-	•	•	•	•	•	•	M20425
Analogue output 0 / 2..10 V	•	•	-	•	•	•	•	•	•	M20426
RS-232 (Modbus/RTU)	•	•	-	•	•	•	•	•	•	M20427
RS-485 (Modbus/RTU)	•	•	-	•	•	•	•	•	•	M20428
Analogue output 0 / 4...20 mA + 2 relays	•	•	-	•	•	•	•	•	-	M20429

Module 2 relays

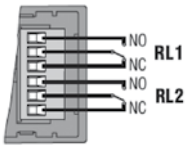

Description

Features

Relay	Switched
Nominal AC Current	8 A
Maximum voltage	250 Vac
Maximum resistive load	2000 V·A
Insulation resistance (at 500 V dc)	>1000 M
Contact - coil insulation	4 kV
Contact - contact insulation	1 kV
Mechanical working life (No. of operations)	$>10^7$
Electrical working life (8 A; 250 V ac) (No. of operations)	$>10^5$
Standards	VDE 0435, VDE 0700, VDE 0110, VDE 0106

Module 4 relays

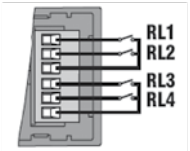

Description

Features

Relay	Simple
Nominal AC Current	5 A
Maximum voltage	250 V ac
Maximum resistive load	750 V·A
Insulation resistance (at 500 V dc)	>1000 MΩ
Contact - coil insulation	2 kV
Contact - contact insulation	750 V ac
Mechanical working life (No. of operations)	$>20 \times 10^6$
Electrical working life (8 A; 250 V ac) (No. of operations)	$>30 \times 10^3$
Standards	UL 508, C22.2 no. 14, VDE 0435

DIN

DH series

Digital instruments for panel mounting

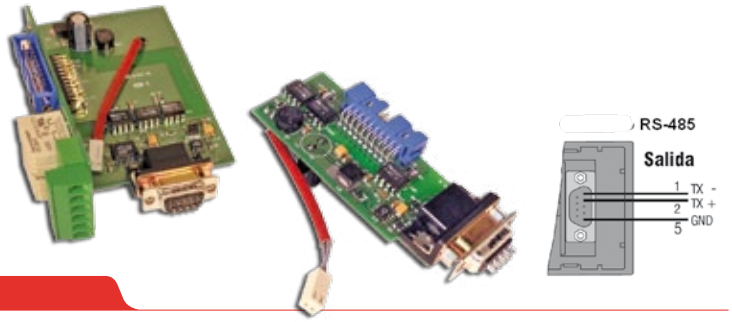

Communications module

Description

- 0 to 247 programmable peripherals
- Selection of peripheral number
- (only in RS-485)
- Selection of communication parameters: speed, parity and stop bits

Features

	RS-232 Module	RS-485 Module
EDS Protection	Up to 10 kVac	Up to 2 kVac
Communication lines protected against overloads, short-circuit to earth	30 V without damage	-
Protected against blockages	Yes	-
Communication lines with thermal protection against excessive power dissipation	-	Yes
Connection or disconnection from the active network	-	Yes
Standards	EIA RS-232	EIA RS-485

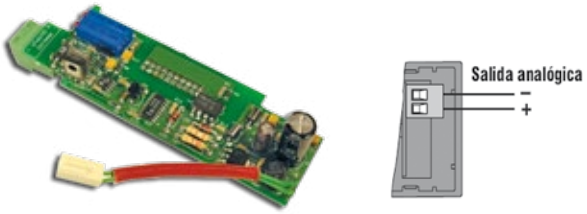

Analogue output module

Description

- Output option:
- 0 20 mA or 4 20 mA
- 0 10 V or 2 10 V
- Range of programmable output

Features

Resolution	14 bits
Maximum load impedance for current outputs	500
Maximum load impedance for voltage outputs	500
Insulation between analogue outputs and the power supply	3 kV
Insulation between analogue and measurement outputs	3 kV
Response time	< 100 ms
Rippling, in TRMS	< 0,5 %
Temperature coefficient	100 ppm / ºC
Standards	IEC 1010, IEC 529, IEC 801, EN 50081-2, EN 5002-2

Auxiliary power supply module (DH96P)

Description

- Selectable auxiliary voltage: 5, 10,
- 15 Vdc
- Compatible with all modules
- (except for relays and communications)
- Power supply for 2 and 3 wire sensor
- 0 / 4...20 mA
- Maximum power 1 V·A

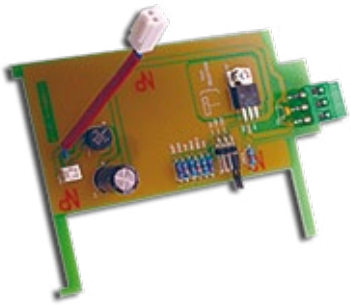

DIN

DH series

Digital instruments for panel mounting

Description

COMMUNICATIONS Features

- 0 to 247 programmable peripherals
- Selection of instrument direction (only in RS-485)
- Selection of communication speed: 1200, 2400, 4800, 9600 and 19200 bits/s
- Selection of parity: even, odd or no parity
- Selection of stop bits: 1 or 2

COMMUNICATIONS Features

	RS-232 Module	RS-485 Module
EDS Protection	Up to 10 kV	Up to 2 kV
Communication lines protected against overloads, short-circuit to earth	30 V without damage	-
Communication lines with thermal protection against excessive power dissipation	-	Yes
Connection or disconnection from the active network	-	Yes
Fully protected against blockages	Yes	-
Standards	EIA RS-232	EIA RS-485

RELAYS Features

- Maximum or minimum alarm connection
- Selectable delay to alarm connection and disconnection, programmable between 1 and 9 999 s
- Selectable hysteresis of between 1 and 9999 points
- Alarm interlocking option
- Option of fail-safe relay

RELAY Features

	2 Relays	4 Relays
Nominal current	8 A	5A
Maximum voltage	250 Vac	
Maximum resistive load	2000 V·A	750 V·A
Insulation resistance (at 500 Vdc)	>1000Ω	Yes
Contact - coil insulation	4 kV	2 kV
Contact - contact insulation: 2/4 relays	1 kV	750 Vac
Mechanical working life (No. of operations)	10^7	20 x 10^6
Electrical working life (8 A and 250 V) (No. of operations)	> 10^5	>30 x 10^4
Standards	VDE 0435, VDE 0700, VDE 0110, VDE 0106	UL 508, C22.2 no. 14, VDE 0435

DIN

DH series

Digital instruments for panel mounting

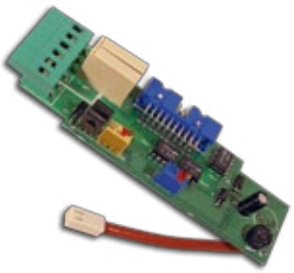

Communications module + 2 relays

Description

ANALOGUE OUTPUT Features

- Optional output programming: 0...20 mA or 4...20 mA
- Programmable output range

ANALOGUE OUTPUT Features

Resolution	14 bits
Maximum load impedance for current outputs	500 Ω
Minimum load impedance for voltage outputs	500 Ω
Insulation between analogue outputs and the power supply	3 kV
Insulation between analogue and measurement outputs	3 kV
Response time	< 100 ms
Rippling, in TRMS	< 0,5 %
Temperature coefficient	100 ppm / ºC
Standards	**IEC 1010, IEC 529, IEC 801, EN 50081-2, EN 50082-2**

RELAYS Features

- Connection of alarm when maximum or minimum values are reached
- Alarm connection and disconnection delay, programmable between 1 and 9,999 seconds
- Hysteresis can be selected between 9,999 and 9999 points
- Optional alarm interlocking
- Optional fail-safe relay

2 RELAY OUTPUT Features

Maximum voltage	250 Vac
Maximum resistive load	750 V·A
Insulation resistance (at 500 Vdc)	> 1 000 M
Contact - coil insulation	2 kV
Contact - contact insulation	750 Vac
Mechanical working life	20 x 10^6 operations
Electrical working life (8 A and 250 V)	> 30 x 10^3 operations
Temperature coefficient	> 30 x 10^3 operations
Standards	**UL 508, C22.2, VDE 0435**

Coding table

M	2	X	X	X	X	0	0	X	X
Code						Internal Code			

Auxiliary power supply	Standard (230 V)	0
	100 ... 120 V ac	1
	380 ... 400 V ac	3
	480 ... 500 V ac	4
	18 ... 36 V dc	7
	36 ... 72 V dc	8
	40 ... 170 V dc	9
Current input	Standard (.../ 5 A)	0
	... / 1 A	1

Digital indicator

Royal series

Digital indicator of various parameters for panel or DIN rail mounting

Description

- 4 digits, high luminosity
- Measurement in true root mean square (TRMS)
- Measurement in 2 or 4 quadrants (power generated and consumed)
- Valid for single and three-phase systems
- 2 built-in relay outputs
- Measurement of maximum and minimum values
- Fully programmable

Application

- Ideal for industrial environments, thanks to its compact and robust format
- Optional fail-safe operation

Features

	ROYAL A4	ROYAL A4-P	ROYAL A3
Power supply circuit	230 Vac (± 15 %)		
Frequency	40 ... 70 Hz		
Consumption	3 V·A		
Measurement circuit			
Scope	20 ... 500 Vac ... / 5 A		
Accuracy	0.5 % FE		
Overvoltage (permanent / during 10 s)	1.2 U_n / 2 U_n		
Overload (permanent / during 10 s)	1.2 I_n / 5 I_n		
Consumption	0.25 V·A		
Frequency	40 ... 70 Hz		
Display	4 digits		
Scale excess indicator	" --- "		
Ambient conditions			
Storage temperature	-25 ... +70 ºC		-25 ... +80 ºC
Operating temperature	0 ... +50 ºC		
Relative humidity	-95% to 40 ºC with no condensation		
Build features			
Box material	ABS VO Plastic		
Degree of protection	Box and terminals: IP 20 / Front panel: IP 52		
Weight	170 g		
Standards	**IEC 1010, IEC 348, IEC 664, VDE 0435, VDE 0110**		

References

Measurement	Parameters	Input	Digital	Size	Fixing	Type	Code
AC	V1n, V2n, V3n or V12, V23, V31	230 V_{p-N} / 400 V_{p-p}	2 relays	6 modules	DIN rail	**ROYAL A3**	**M20332**
AC	V, A, Hz, W, V·A, var, cos φ, MD, THD	... / 5 A	2 relays	6 modules	DIN rail	**ROYAL A4**	**M20242**
AC	V, A, Hz, W, V·A, var, cos φ, MD, THD	... / 5 A	2 relays	96x48x38	Panel	**ROYAL A4-P**	**M20241**

Digital instruments

ROYAL series

Digital indicator of various parameters for panel or DIN rail mounting

Coding table

M	2	X	X	X	X	0	0	X	X
Code						Internal Code			

Auxiliary power supply	Standard (230 V)	0
	100 ... 120 V ac	1
	380 ... 400 V ac	3
	480 ... 500 V ac	4
	18 ... 36 V dc	7
	36 ... 72 V dc	8
	40 ... 170 V dc	9
Current input	Standard (.../ 5 A)	0
	... / 1 A	1

Dimensions

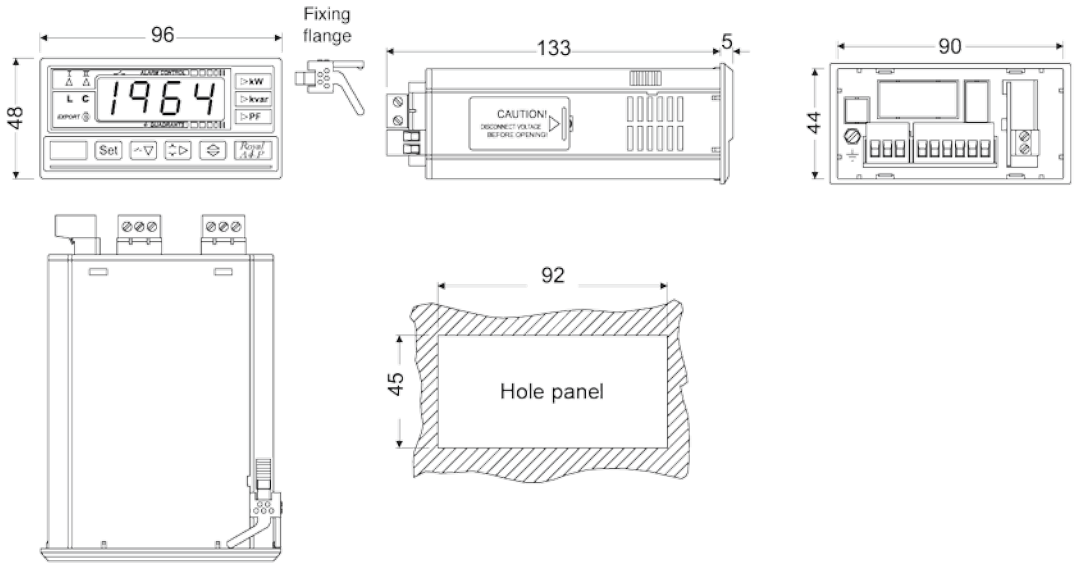

Connections

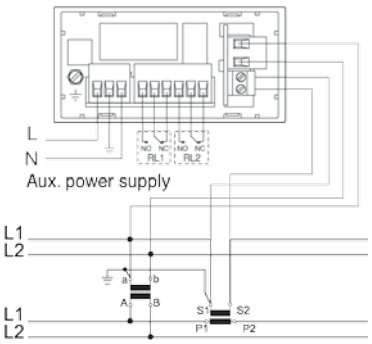

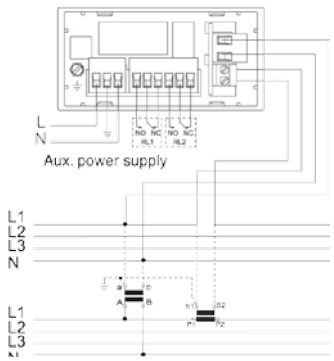

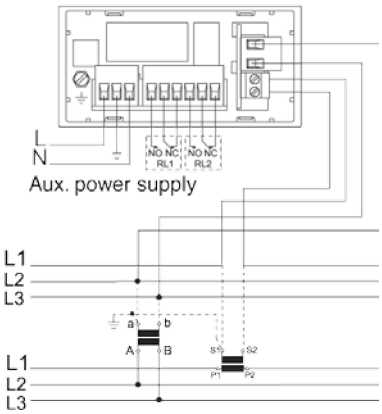

Digital instruments

DM45 Series

Digital indicator for DIN rail mounting

Description

- Electrical parameter indicator equipment
- Its design enables the installation of the unit on small panels
- It measures voltage, current, frequency and harmonic distortion, depending on the type
- Fully sealed
- Fully programmable alarm relay
- Robust and compact
- Stores maximum and minimum values

Application

- Displays one or various electrical parameters of a sub-panel, control process or determined machine
- Alarm system: the unit's internal relay can act on contactors, sound and/or light devices to carry out a protection or warning operation.

Features

	DM 45 V	DM 45 A	DM 45 AD	DM 45 F
Power supply circuit	230 Vac (± 10 %)			
Frequency	40 ... 70 Hz			
Consumption	5 V·A			
Measurement circuit				
Scope	600 Vac	... / 5 Aac	30 Aac	10...600 Hz
Accuracy	+/- 0.5 % FE +/- 1 digit			
Overvoltage (permanent)	1.05 U_n	-	-	1.05 U_n
Overload (permanent)	-	1.2 I_n		-
Consumption	0.6 V·A			
Frequency	10...600 Hz			
Display	4 digits with 7 segments, red colour + 4 auxiliary LEDs			
Ambient conditions				
Storage temperature	- 40 ... + 70 ºC			
Operating temperature	- 20 ... + 50 ºC			
Relative humidity	5 ... 95 % non-condensing			
Build features				
Box material	Self-extinguishing ABS plastic			
Degree of protection	Front panel: IP 54			
Weight	170 g			
Standards	IEC 1010, IEC 664, IEC/EN 62053-31			
Safety standards	**IEC61010**			

* Other possible auxiliary power supplies
9..18 Vd.c. / 18...36 Vd.c. / 36...72 Vd.c.

Digital instruments

DM45 series

Digital indicator for DIN rail mounting

References

DM. Voltmeter

Measurement	Parameters	Input	Relay	Type	Code
AC	V	30..0.600 Vac	1	**DM 45 V**	**M20901**

DM. Ammeters

Measurement	Parameters	Input	Relay	Type	Code
AC	A	... / 5 A	1	**DM 45 A**	**M20911**
AC	A	30 A	1	**DM 45 AD**	**M20921**

DM. Frequency-meter

Measurement	Parameters	Input	Relay	Type	Code
AC	Hz	10 ... 600 Hz	1	**DM 45 F**	**M20931**

DM. Measurement stations

Measurement	Parameters	Input	Relay	Type	Code
AC	V, A, Hz, THD	600 V / .../5 A / 10...600 Hz	1	**DM 45 CM**	**M20941**
AC	V, A, Hz, THD	600 V c / 30 A / 10...600 Hz	1	**DM 45 CMD**	**M20951**

Coding table

M	2	X	X	X	X	0	0	X
Code						Internal Code		↑

Auxiliary power supply	Standard (230 V)	0
	100 ... 115 V ac	1
	18 ... 36 V dc	7

Dimensions

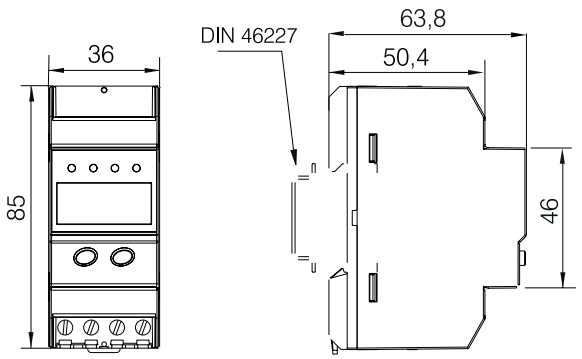

Connections

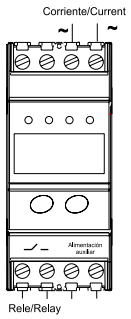

CMM 96

Digital three-phase measurement station for panel mounting

Description

- Measures V, A, Hz and unbalances per phase
- Measurement in true root mean square (TRMS)
- Optional expansion of its functions with expansion modules:
  - 4 fully programmable relays
  - Programmable output range

Application

- Ideal for unbalanced 3 or 4 wire three-phase networks for the analysis of electrical parameters.
- Time control with the timer function, (type **CH**)
- Control of the maximum demand, thanks to the maximeters available per phase (type **MD**)

Features

Power supply circuit	
Power supply	230 Vac (-10 ... +15 %)
Frequency	35 ... 450 Hz
Consumption	5 V·A
Measurement circuit	
Scope	400 V F-N, 565 V P-P ... / 5 A
Accuracy	0.5 % (± 2 dig)
Overload (permanent)	1.2 I_n
Consumption	0.6 V·A
Frequency	35 ... 450 Hz
Display	
Display	Three 4-digit lines
Colour	Red, high efficiency
Display refresh rate	1 s
Ambient conditions	
Storage temperature	- 40 ... +70 ºC
Operating temperature	- 10 ... +65 ºC
Build features	
Box material	Self-extinguishing ABS
Degree of protection	IP 54 front panel
Size	96 x 96 x 87 mm
Weight	350 g
Standards	
IEC 1010, IEC 348, IEC 664, EN 50081-1, EN 50082-1	

CMM 96

Digital three-phase measurement station for panel mounting

References

Measurement	Parameters	Input	Type	Code
AC	V,A, Hz and MD per phase	400 V_{p-n} / 565 V_{p-p}	**CMM96-MD**	**M20511**
AC	V, A, Hz per phase and timer	400 V_{p-n} / 565 V_{p-p}	**CMM96-CH**	**M20512**

Expansible modules

Inputs	Outputs	Type	Code
-	4 relays	Module with 4 relays CMM 96 -MD	**M20522**
1 CH input	4 relays	Module with 4 relays CMM 96-CH	**M20524**

Coding table

M	2	X	X	X	X	0	0	X	X

Code		Internal Code	
Auxiliary power supply	Standard (230 V)		0
	400 V ac		3
	18 ... 36 V dc		7
Insulated inputs	Standard (not insulated)		0
	Insulated - ITF		1

Dimensions

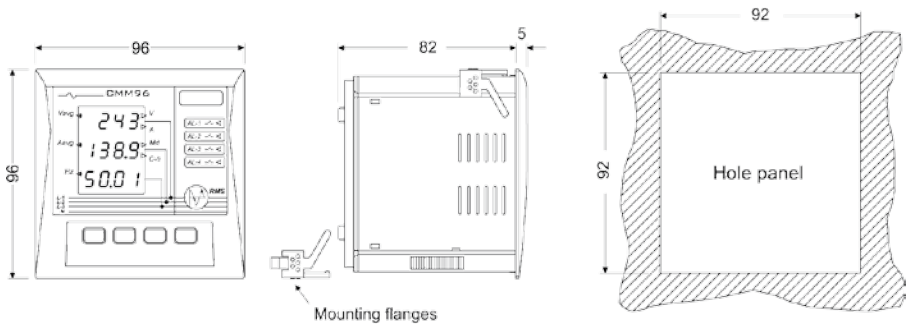

Connections

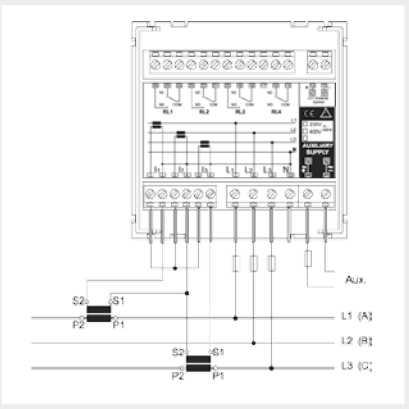

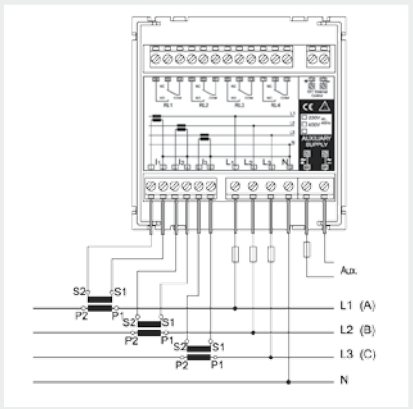

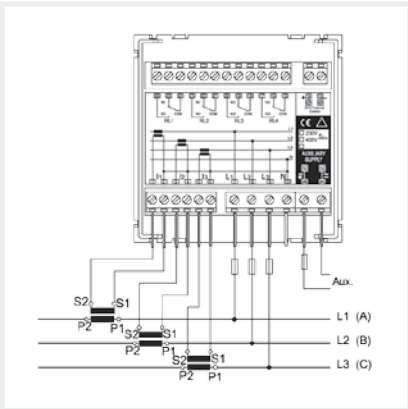

Converters

Narrow profile transducers

Electrical parameter transducer in a process signal

Description

- Convert voltage, current or frequency in a single-phase system
- Very competitive quality / price ratio
- Ideal for small installations
- Very reliable and robust devices
- Valid for work under demanding conditions

Application

- Systems for the conversion of the electrical parameters of single-phase networks in industrial environments where there are demanding conditions and there is a reduced space.
- Converts voltage, current or frequency into a single-phase system in analogue output or process signal.
- Conversion of electrical parameter signal to process signal for PLCs.

Features

	CVE-A	CCE	CFE
Power supply circuit	230 Vac (-15 ... +20 %) (*1)		
Frequency	40 ... 90 Hz		
Consumption	2.5 V·A		
Measurement circuit			
Consumption	< 0.2 V·A		
Frequency	45 ... 65 Hz		
Nominal voltage (U_n)	0..0.690 Vac	-	10..0.600 Vac
Nominal current (I_n)	-	5 A ac	-
Measurement range	5-120 % (*2)		
Overload (permanent)	-	300 % I_n	-
Overvoltage	1000 V	-	1000 V
Analogue output circuit			
Voltage load impedance	> 500		
Current load impedance	< 500		
Response time	< 300 ms		
Rippling, in TRMS	< 0,5 %		
Insulation			
Test voltage	3 kV		
Impulse test	4 kV		
Ambient conditions			
Storage temperature	-40 ... +70 ºC		
Operating temperature	-10 ... +55 ºC		
Altitude	2000 m		
Build features			
Box material	ABS V0		
Degree of protection	Box: IP 20 / Front panel: IP 54		
Weight (g)	190	250	190
Standards	**IEC 529, IEC 688, IEC 801, EN 50081-1, EN 50082-1**		

(*1) For other types of power supply, see the coding table
(*2) CVE-A-AP i CFE-AP: Measurement range 70-110 %

Narrow profile transducers

Converter of electrical parameters into process signals

References

Standard auxiliary power supply: 230 Vac, 45...65 Hz (*)

For non-standard purchase orders, please state the following: 1.Code, 2.Input range, 3.Output range, 4.Auxiliary power supply, 5. In **CFE-AP**, state the network voltage. (See coding table)

Application	Measurement	Accuracy	Input (*)	Output (*)	Type	Code
Voltmeter	AC	0.5 % FE	300 V	4...20mA	**CVE-A**	**M25011**
Voltmeter (*1)			230 V	0...20mA	**CVE-A-AP**	**M25021**
Ammeter			5 A	4...20mA	**CCE-A**	**M25111**
Ammeter (*1)				0...20mA	**CCE-A-AP**	**M25121**
Frequency-meter			45..0.55 Hz	4...20mA	**CFE**	**M25511**
Frequency-meter (Self-powered)				0...20mA	**CFE-AP**	**M25521**

(*1) Self-powered: does not need an auxiliary power supply.
(*) Other inputs, outputs and auxiliary power supplies are offered as an option (See coding table).

Coding table

	M	2	X	X	X	X	0	0	X	X	X	X	X
1	Code						Internal Code						
2 - INPUTS	CVE-A Voltage	Standard (300 V)							0				
		110 V							1				
		400 V							2				
		500 V							3				
		690 V							4				
	CVE-A-AP Voltage	Standard (230 V)							0				
		110 V							1				
		400 V							2				
	Current	Standard (5 A)							0				
		1 A							1				
		10 A							4				
	Frequency	Standard (45...55 Hz)							0				
		55...65 Hz							1				
		47..0.53 Hz							2				
		45...65 Hz							3				
		0..0.100 Hz							4				
		380..0.420 Hz							5				
		360..0.440 Hz							6				
		340..0.460 Hz							7				
3 - OUTPUTS	CVE-A, CCE-A, CFE	Standard (4...20 mA)								0			
		0...20 mA								1			
		0..0.10 V								2			
		2..0.10 V								3			
	CVE-A-AP, CCE-A-AP, CFE-AP	Standard (0...20 mA)								0			
		0..0.10 V								1			
4	Auxiliary power supply	Standard (220...240 V)									0		
		380...40 Vac 40/60 Hz									3		
		18...36 Vdc									7		
5	Network voltage (CFE-AP)	Standard (230 V)										0	0
		110 V										0	1
		400 V										0	2

Dimensions

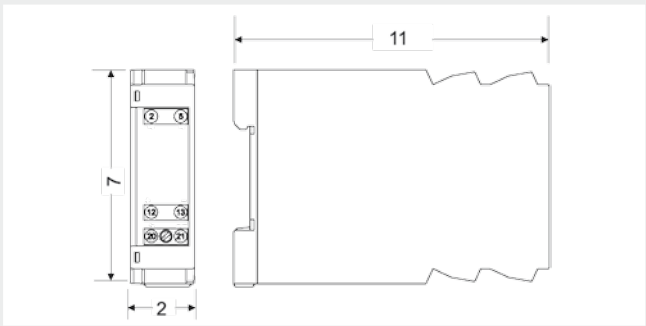

Connections

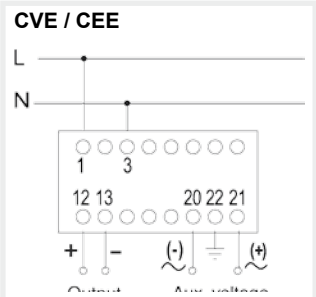

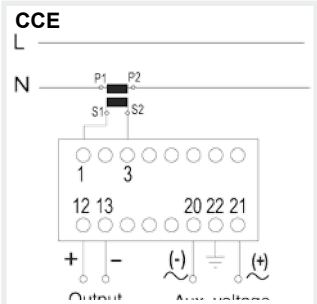

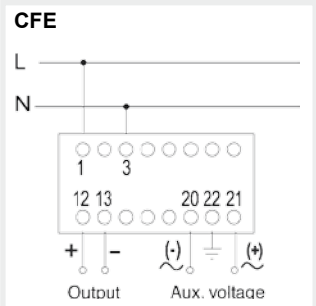

High-precision

High-precision transducers

Converter of electrical parameters into process signals

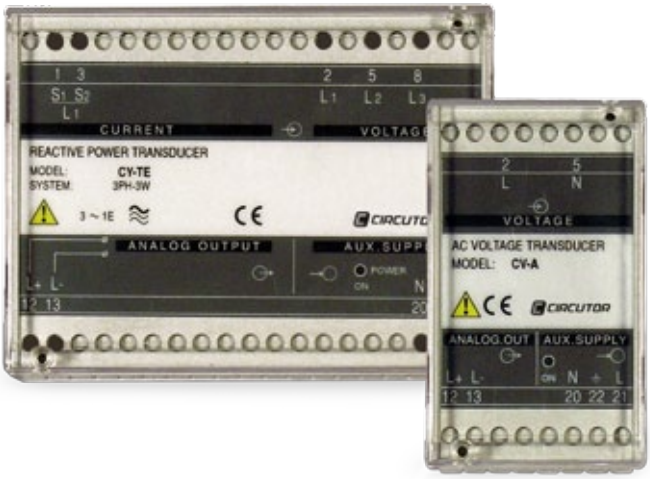

Description

- Wide range of models to measure the main parameters of the electrical network.
- Very reliable and robust devices
- Valid for work under demanding conditions

Applications

- Systems for the conversion of the electrical parameters of single and three-phase networks in industrial environments where there are demanding conditions
- Conversion of electrical parameters to process signal for PLC or displays.

Features

	CV-A	CW / CY	CCOS / CPF / CFD	CC-WG	CC-D	CC-G	CF	CR2	CT-PT	CC-A	CV-D
Power supply circuit	220...240 V ac (*1)										
Frequency	40 ... 90 Hz										
Consumption	2.5 V·A										
Measurement circuit											
Consumption	< 0.2 V·A										
Frequency	45 ... 65 Hz										
Nominal voltage (Un)	0..0.690 Vac			-			40 ... 600 Vac	-			0 mV... 500 V ac
Nominal current (In)	5 A ac			0..0.3 A ac	500 mA ...10 A	0...20 mA				0..0.5 A ac	-
Measurement range	0...150 % U_n			0...150 %	0...120 %		0...20 kHz	0...200 k	-		
Overload (permanent)	300 %				150 %	300 %		-		300 %	150 %
Input impedance	3000 Ω / V			-			180 Ω / V	-			1000 Ω / V
Analogue output circuit											
Voltage load impedance	> 500 Ω										
Current load impedance	< 500 Ω										
Response time	< 300 ms		< 500 ms	< 300 ms	< 100 ms		< 500 ms			< 300 ms	
Rippling (TRMS)	< 0,5 %										
Insulation											
Test voltage	3 kV				2 kV		3 kV				2 kV
Impulse test (1, 2...50 ms)	4 kV				3 kV		4 kV				3 kV
Ambient conditions											
Storage temperature	- 40 ... +70 ºC										
Operating temperature	-10 ... +55 ºC										
Altitude	2000 m										

Converters

High-precision transducers

Converter of electrical parameters into process signals

	CV-A	CW / CY	CCOS / CPF / CFD	CC-WG	CC-D	CC-G	CF	CR2	CT-PT	CC-A	CV-D
Build features											
Box material	ABS VO										
Weight (g)	310	540	310								
Ambient conditions	**IEC 529, IEC 688, IEC 801, EN 50081-1, EN 50082-1**										

(*1) For other types of power supply, see the coding table

References

CV-A. AC voltage transducer

Standard auxiliary power supply: 230 Vac, 40...90 Hz

For non-standard purchase orders, please state the following:
1. Code, 2. Input range, 3. Output range, 4. Auxiliary power supply (see coding table)

Type of input	Measurement	Accuracy	Input	Digital	Type of measurement	Type	Code
Alternating voltage	AC	± 0.5 % reading	690 Vac	0...20 mA	Measurement in mean values	**CV-A-AP (*1)**	**M25041**
		± 0.2 % reading		0...20 mA		**CV-A**	**M25031**
		± 0.2 % reading		4...20 mA		**CV-A**	**M25032**
		± 0.2 % reading		0...20 mA	Measurement in true root mean square	**CV-A-RMS**	**M25051**
		± 0.2 % reading		4...20 mA		**CV-A-RMS**	**M25052**

(*1) Self-powered: does not need an auxiliary power supply

CC-A. Alternating current transducer

Standard auxiliary power supply: 230 Vac, 40...90 Hz

For non-standard purchase orders, please state the following:
1. Code, 2. Input range, 3. Output range, 4. Auxiliary power supply (see coding table)

Type of input	Measurement	Accuracy	Input	Digital	Type	Code
Alternating current	AC	± 0.2 % reading	5 A	0...20 mA	**CC-A**	**M25131**
		± 0.2 % reading		4...20 mA	**CC-A**	**M25132**
		± 0.2 % reading		0...20 mA	**CC-A-AP (1)**	**M25141**
		± 0.2 % reading		0...20 mA	**CC-A-RMS**	**M25151**
		± 0.2 % reading		4...20 mA	**CC-A-RMS**	**M25152**

(*1) Self-powered: does not need an auxiliary power supply

CV-D. DC Voltage transducer

Standard auxiliary power supply: 230 Vac, 40...90 Hz

For non-standard purchase orders, please state the following:
1. Code, 2. Input range, 3. Output range, 4. Auxiliary power supply (see coding table)

Type of input	Measurement	Accuracy	Input	Digital	Type	Code
DC Voltage	DC	± 0.2 % reading	10 mV ... 500 V	0...20 mA	**CV-D**	**M25061**
		± 0.2 % reading		4...20 mA	**CV-D**	**M25062**

Converters

High-precision transducers

Transducer of electrical parameters into process signals

References

CC-D. Direct current transducer

Standard auxiliary power supply: 230 Vac, 40...90 Hz

For non-standard purchase orders, please state the following:
1. Code, 2. Input range, 3. Output range, 4. Auxiliary power supply (see coding table)

Type of input	Measurement	Accuracy	Input	Digital	Type	Code
DC Voltage	DC	± 0.2 % reading	500 µA ... 10 A	0...20 mA	**CC-D**	**M25161**
		± 0.2 % reading		4...20 mA	**CC-D**	**M25162**

CC-WG. Leakage current transducer

Standard auxiliary power supply: 230 Vac, 40...90 Hz

For non-standard purchase orders, please state the following:
1. Code, 2. Input range, 3. Output range, 4. Auxiliary power supply (see coding table)

Type of input	Measurement	Accuracy	Input	Digital	Type	Code
Leakage current	AC	± 0.2 % reading	0..0.3 Aac	4...20 mA	**CC-WG**	**M25631**

C-F. Frequency transducer

Standard auxiliary power supply: 230 Vac, 40...90 Hz

For non-standard purchase orders, please state the following:
1. Code, 2. Input range, 3. Output range, 4. Auxiliary power supply (see coding table)

Type of input	Measurement	Accuracy	Input	Digital	Type	Code
Frequency	AC	± 0.2 % reading	40..0.690 V 0...20 kHz	0...20 mA	**CF**	**M25531**
		± 0.2 % reading		4...20 mA	**CF**	**M25532**

CC-G. Galvanic insulation transducer

Standard auxiliary power supply: 230 Vac, 40...90 Hz

Type of input	Measurement	Accuracy	Input	Digital	Type	Code
Insulation galvanic	-	± 0.2 % reading	0...20 mA	0...20 mA	**CC-G**	**M25610**

CT-PT100. Temperature transducer

Standard auxiliary power supply: 230 Vac, 40...90 Hz

For non-standard purchase orders, please state the following:
1. Code, 2. Input range, 3. Output range, 4. Auxiliary power supply (see coding table)

Type of input	Measurement	Accuracy	Input	Digital	Type	Code
Temperature	-	± 0.2 % reading	Depending on the sensor	0...20 mA	**CT-PT100**	**M25651**
		± 0.2 % reading		4...20 mA	**CT-PT100**	**M25652**

Converters

High-precision transducers

Transducer of electrical parameters into process signals

References

CR-2. Resistance transducer

Standard auxiliary power supply: 230 Vac, 40...90 Hz

For non-standard purchase orders, please state the following:
1. Code, 2. Input range, 3. Output range, 4. Auxiliary power supply (see coding table)

Type of input	Measurement	Accuracy	Input	Digital	Type	Code
Resistance	-	± 0.2 % reading	1...200 kΩ	0...20 mA	**CR-2**	**M25641**
		± 0.2 % reading		4...20 mA	**CR-2**	**M25642**

CW. Active power transducer

Standard auxiliary power supply: 230 Vac, 40...90 Hz

For non-standard purchase orders, please state the following:
1. Code, 2. Input range, 3. Output range, 4. Auxiliary power supply, 5. (phase-phase), 6. I_n, 7. f_n (see coding table)

Type of input	Measurement	Accuracy	System	Input	Digital	Type	Code
Active power	AC	± 0.5 % reading	Single-phase	300 V.../5 A	0...20 mA	**CW-M**	**M25211**
					4...20 mA	**CW-M**	**M25212**
			Balanced three-phase		0...20 mA	**CW-TE**	**M25221**
					4...20 mA	**CW-TE**	**M25222**
			Unbalanced three-phase ARON (3 wires)		0...20 mA	**CW-TA**	**M25231**
					4...20 mA	**CW-TA**	**M25232**
			Unbalanced three-phase ARON (4 wires)		0...20 mA	**CW-TAN**	**M25241**
					4...20 mA	**CW-TAN**	**M25242**

CY. Reactive energy transducer

Standard auxiliary power supply: 230 Vac, 40...90 Hz

For non-standard purchase orders, please state the following:
1. Code, 2. Input range, 3. Output range, 4. Auxiliary power supply, 5. (phase-phase), 6. I_n, 7. f_n (see coding table)

Type of input	Measurement	Accuracy	System	Input	Digital	Type	Code
Power factor	AC	± 0.5 % reading	Single-phase	300 V.../5 A	0...20 mA	**CY-M**	**M25251**
					4...20 mA	**CY-M**	**M25252**
			Balanced three-phase		0...20 mA	**CY-TE**	**M25261**
					4...20 mA	**CY-TE**	**M25262**
			Unbalanced three-phase ARON (3 wires)		0...20 mA	**CY-TA**	**M25271**
					4...20 mA	**CY-TA**	**M25272**
			Unbalanced three-phase ARON (4 wires)		0...20 mA	**CY-TAN**	**M25281**
					4...20 mA	**CY-TAN**	**M25282**

Converters

High-precision transducers

Transducer of electrical parameters into process signals

References

CPF. Power factor transducer

Standard auxiliary power supply: 230 Vac, 40...90 Hz

For non-standard purchase orders, please state the following:
1. Code, 2. Input range, 3. Output range, 4. Auxiliary power supply, 5. (phase-phase), 6. I_n, 7. f_n (see coding table)

Type of input	Measurement	Accuracy	System	Input	Digital	Type	Code
Power factor	AC	± 0.5 % reading	Single-phase	300 V.../5 A	0...20 mA	CPF-M	M25311
					4...20 mA	CPF-M	M25312
			Unbalanced three-phase ARON (3 wires)		0...20 mA	CPF-TE	M25321
					4...20 mA	CPF-TE	M25322
			Unbalanced three-phase ARON (4 wires)		0...20 mA	CPF-TEN	M25331
					4...20 mA	CPF-TEN	M25332

CCOS. cos φ transducer

Standard auxiliary power supply: 230 Vac, 40...90 Hz

For non-standard purchase orders, please state the following:
1. Code, 2. Input range, 3. Output range, 4. Auxiliary power supply, 5. (phase-phase), 6. I_n, 7. f_n (see coding table)

Type of input	Measurement	Accuracy	System	Input	Digital	Type	Code
cos φ	AC	± 0.5 % reading	Single-phase	300 V.../5 A	0...20 mA	CCOS-M	M25341
					4...20 mA	CCOS-M	M25342
			Unbalanced three-phase ARON (3 wires)		0...20 mA	CCOS-TE	M25351
					4...20 mA	CCOS-TE	M25352
			Unbalanced three-phase ARON (4 wires)		0...20 mA	CCOS-TEN	M25361
					4...20 mA	CCOS-TEN	M25362

CFD. Current distortion factor transducer

Standard auxiliary power supply: 230 Vac, 40...90 Hz

For non-standard purchase orders, please state the following:
1. Code, 2. Input range, 3. Output range, 4. Auxiliary power supply, 5. (phase-phase), 6. I_n, 7. f_n (see coding table)

Type of input	Measurement	Accuracy	System	Input	Digital	Type	Code
Distortion factor of *I*	AC	± 0.2 % reading	-	5 A	0...20 mA	CFD-THD	M25411
		± 0.2 % reading			4...20 mA	CFD-THD	M25412
		± 0.2 % reading			0...20 mA	CFD-D	M25421
		± 0.2 % reading			4...20 mA	CFD-D	M25422

Converters

High-precision transducers

Transducer of electrical parameters into process signals

Dimensions

CV-A, CV-D, CC-A, CC-D, CR2

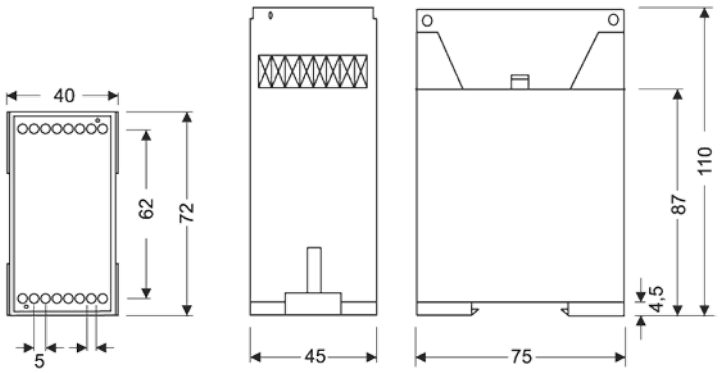

Connections

CV-A

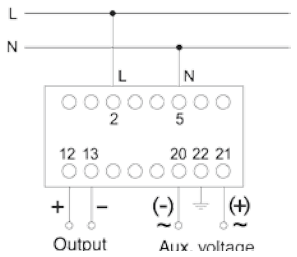

CV-D

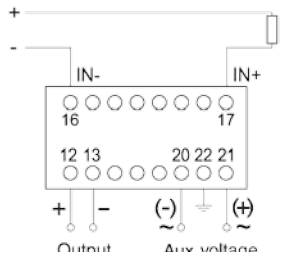

CC-A

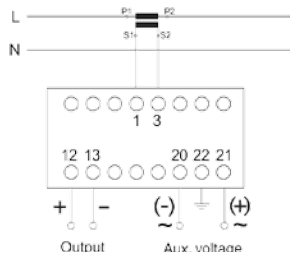

CC-D

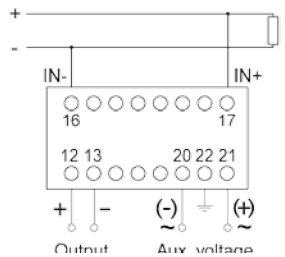

CR2

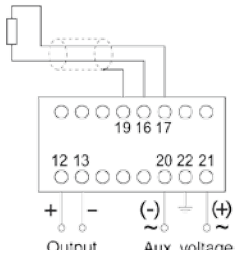

Converters

High-precision transducers

Transducer of electrical parameters into process signals

Dimensions

CW, CY, CPF

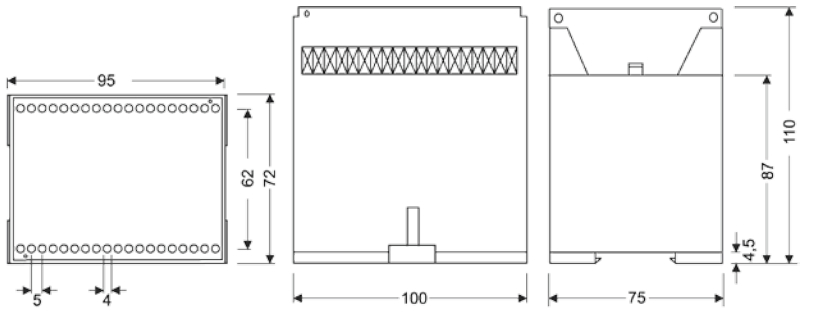

Connections

CW

CW-TA

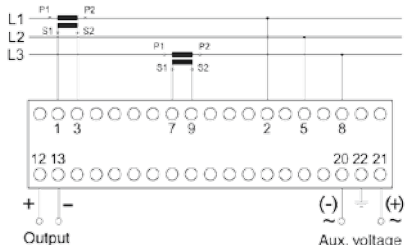

CW-TAN

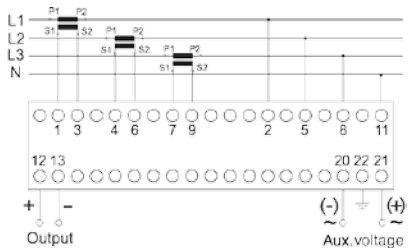

CW-TE

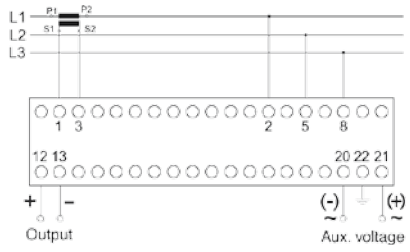

CY

CY-TE

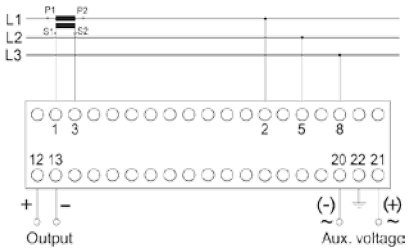

CY-TA

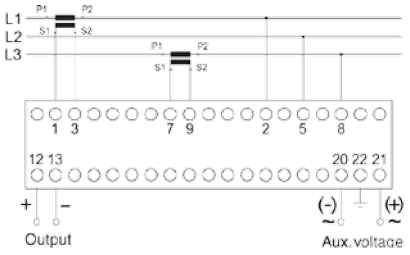

CY-TAN

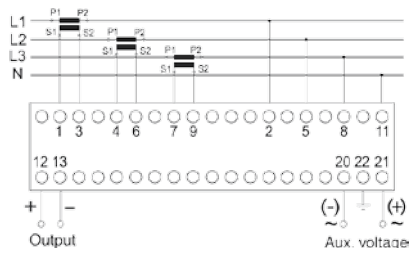

CPF

CPF-TE

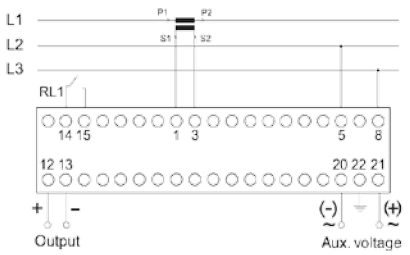

CPF-TEN

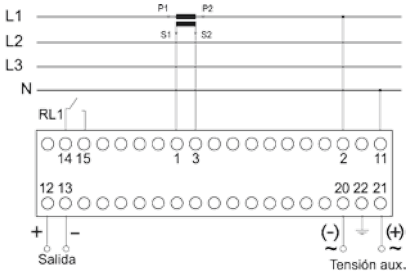

CPF-M

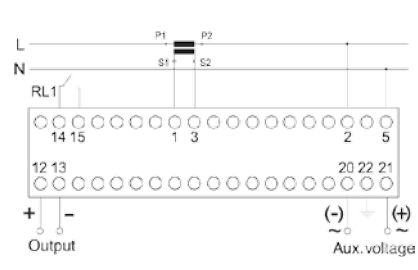

Converters

High-precision transducers

Transducer of electrical parameters into process signals

Dimensions

CCOS / CFD

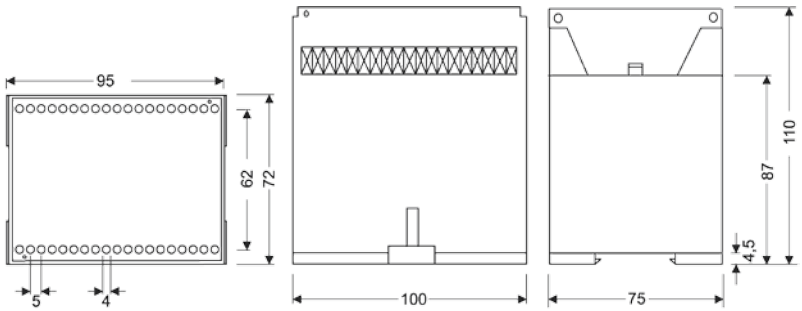

Connections

CCOS

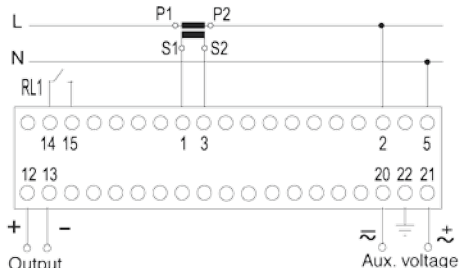

CFD-THD / CFD-D

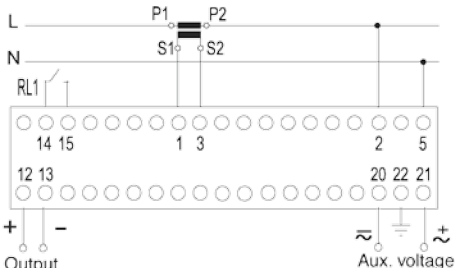

Dimensions

CT-PT100

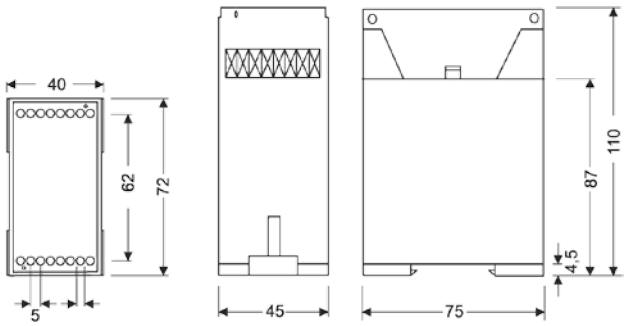

Connections

CT-PT100

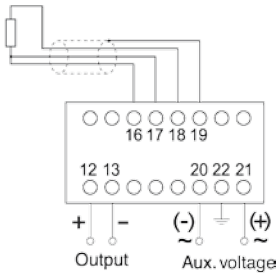

Converters

High-precision transducers

Transducer of electrical parameters into process signals

Coding table

M	2	X	X	X	X	0	0	X	X	X
Code						Internal Code				

INPUTS	Alternating voltage	Standard (300 V)	0
		110 V	1
		400 V	2
		500 V	3
		690 V	4
	Alternating current	Standard (5 A)	0
		1 A	1
		10 A	4
	DC Voltage	Standard (10 V)	0
		60 mV	1
		1 V	2
		100 V	3
		500 V	4
	Direct current	Standard (20 mA)	0
		200 mA	1
		1 A	2
		10 A	3
	Power, power factor, cos j (V, A)	Standard (300 V, .../ 5 A)	0
		110 V, .../5 A	1
		400 V, .../5 A	2
		500 V, .../5 A	3
		600 V, .../5 A	4
		300 V, .../1 A	5
		110 V, .../1 A	6
		400 V, .../1 A	7
		500 V, .../1 A	8
		600 V, .../1 A	9
	Distortion I	Standard (5 A)	0
		1 A	1
	Leakage current, Universal process		0
	Resistance	Standard (20 Ω)	0
		200 Ω	1
		2 kΩ	2
		20 kΩ	3
	Temperature	Standard (-200...+200 °C)	0
		-200 ... +800 °C	1
	Frequency	Standard (45...55 Hz)	0
		55...65 Hz	1
		47..0.53 Hz	2
		57...63 Hz	3
		0..0.100 Hz	4
OUTPUTS	Outputs 1, 3	Standard (0...20 mA)	0
		0..0.1 mA	1
		0..0.10 mA	2
		2 V	3
		5 V	4
		0..0.10 V	5
		-20...0...20 mA	6
		-10...0...10 V	7
		-5...0..0.5 V	8
	Outputs 2	Standard (4...20 mA)	0
		2..0.10 V	2
	Auxiliary power supply	Standard (220...240 V)	0
		380...40 Vac 40/60 Hz	3
		18...36 Vdc	7
		90..0.140 Vdc	9

accessories

Accessory

PowerStudio

Description

Software.
See M.9 Catalogue
Code M90211

Accessory

PowerStudio Scada

Description

Software.
HASP USB License
See catalogue M.9
Code M90231

Accessory

Front Panel Adaptors

Description

IP 65. Front panel protector 48 x 96 mm
Code M29921

Description

- Front panel adaptor 48 x 48 to 72 x 72 mm
  Code M29911
- Front panel adaptor 48 x 48 to 96 x 96 mm
  Code M29912
- Front panel adaptor 72 x 72 to 96 x 96 mm
  Code M29914

Description

- Front panel adaptor 48 x 96 to 96 x 96 mm
  Code M29913